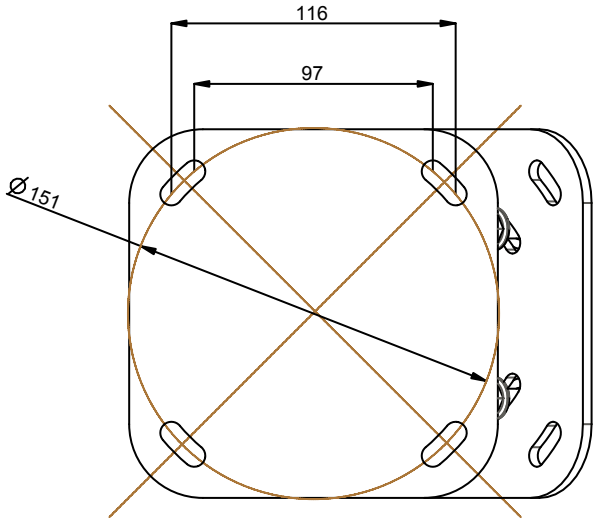

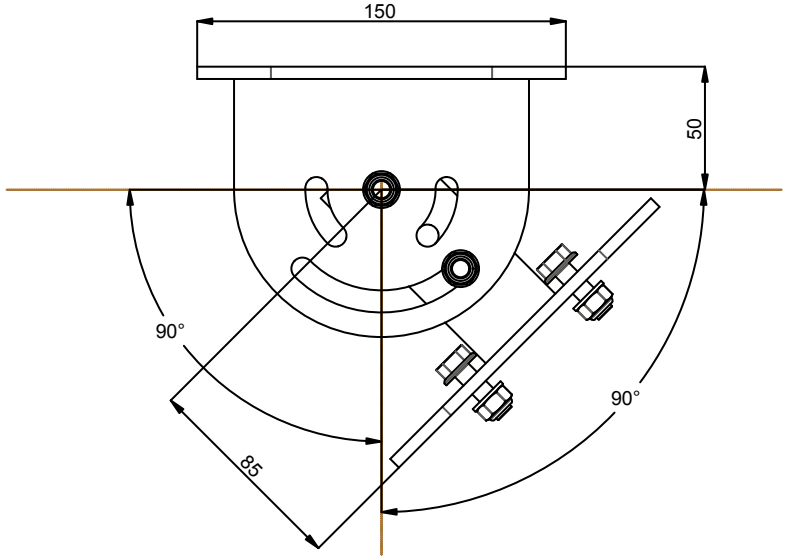

180° turnable

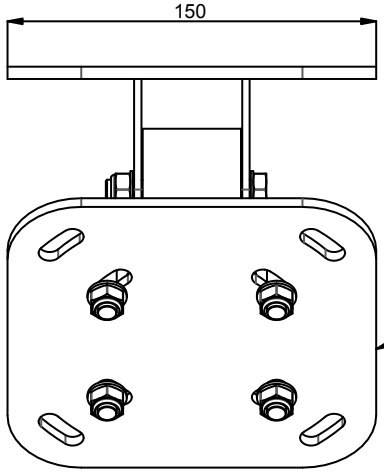

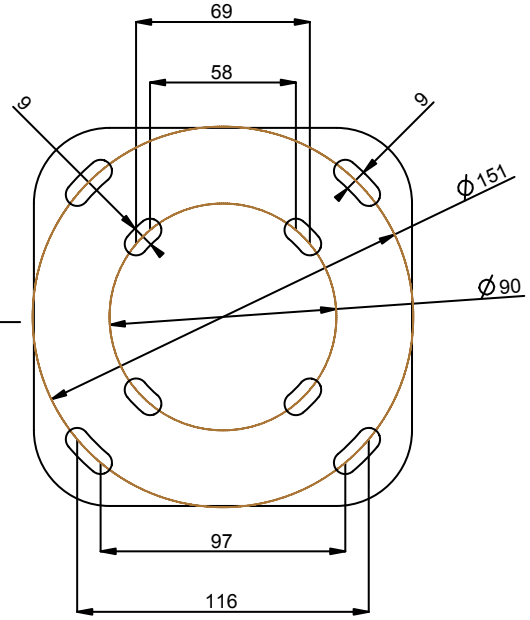

Maximum load	120 KG
Package weight	2,6 KG

product: CONTINOUOUS ANGULAR ADJUSTMENT	product code: 003-1180	SmartMetals® by Sky-Lite Holland BV Handelsweg 4 4231 EZ Meerkerk www.smartmetals.eu
	units: mm / sheet: 1 /1	